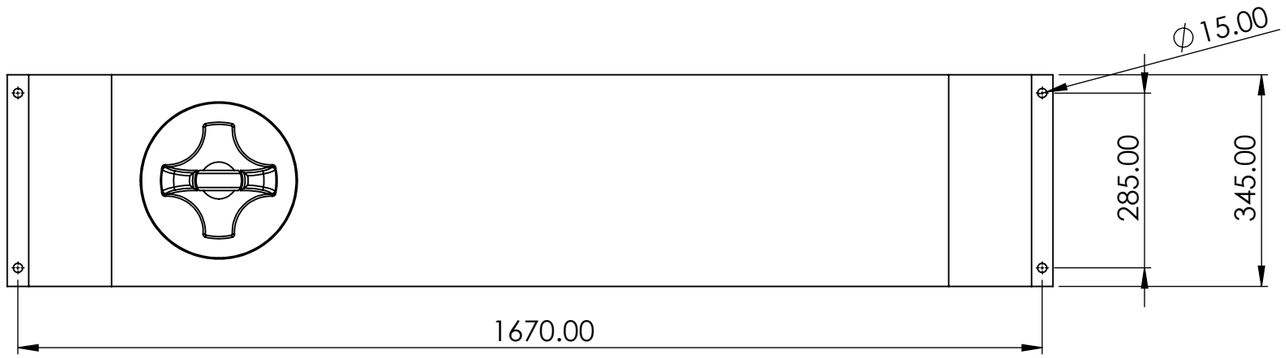

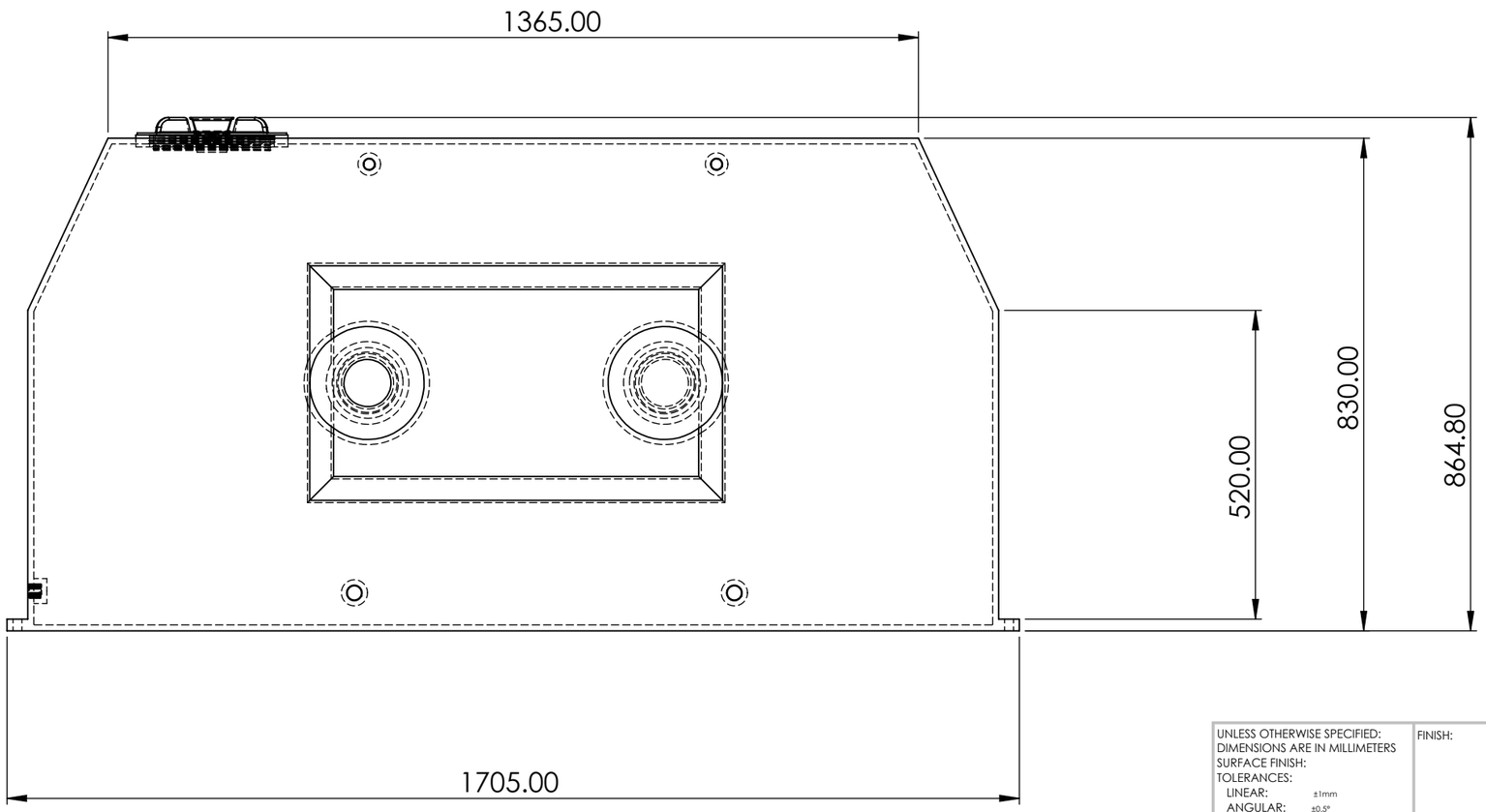

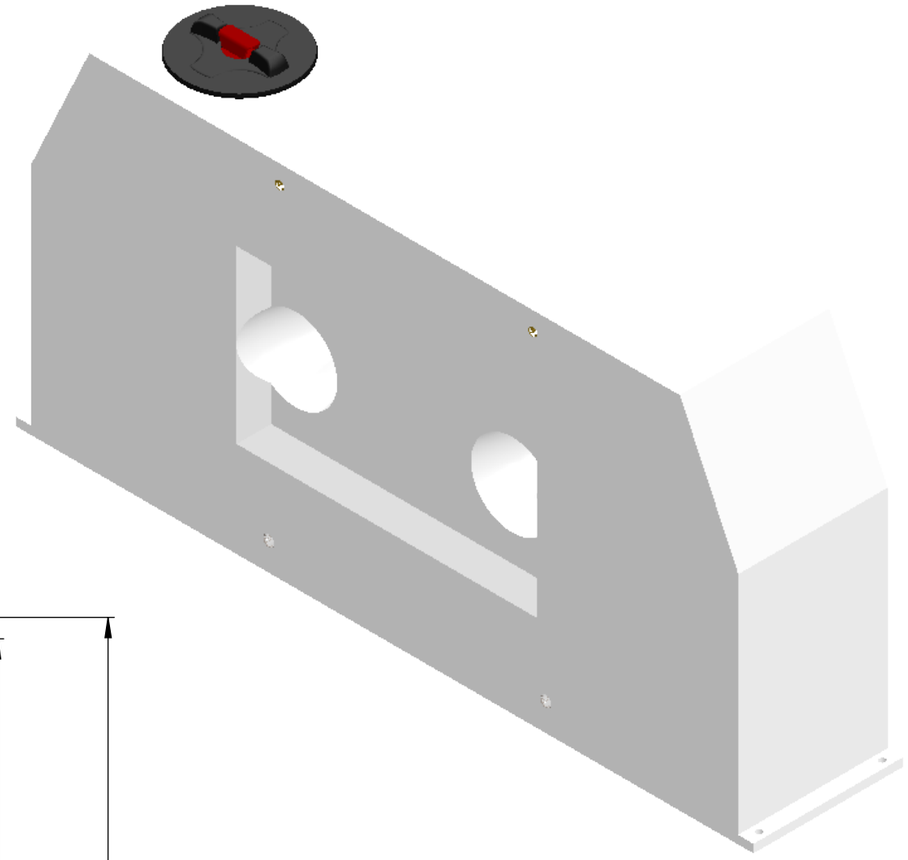

UNLESS OTHERWISE SPECIFIED: DIMENSIONS ARE IN MILLIMETERS SURFACE FINISH: TOLERANCES: LINEAR: ±1mm ANGULAR: ±0.5°	FINISH:		DEBURR AND BREAK SHARP EDGES			
	NAME	SIGNATURE	DATE	REVISIONS		
DRAWN	Harrison F		8/1/2025	NO	NAME	DATE
CHK'D	Ryan B		13/1/2025			
APPV'D						
MFG						
Q.A				MATERIAL: Plastic		
				WEIGHT: 45501.19		

B.A.R. Group P/L

PART NO. / PRODUCT

125 85.601.009
GA Drawing

DESCRIPTION

Headboard Poly Tank - 400L

A3

SCALE:1:10

SHEET 1 OF 1