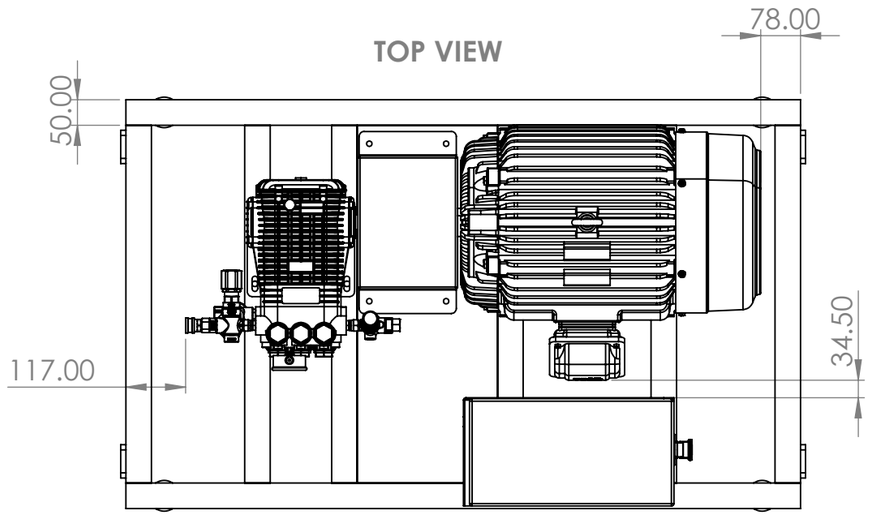

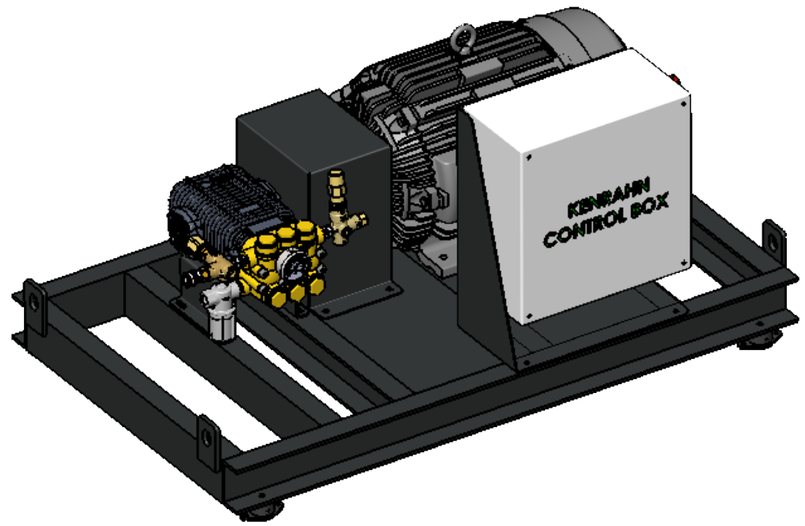

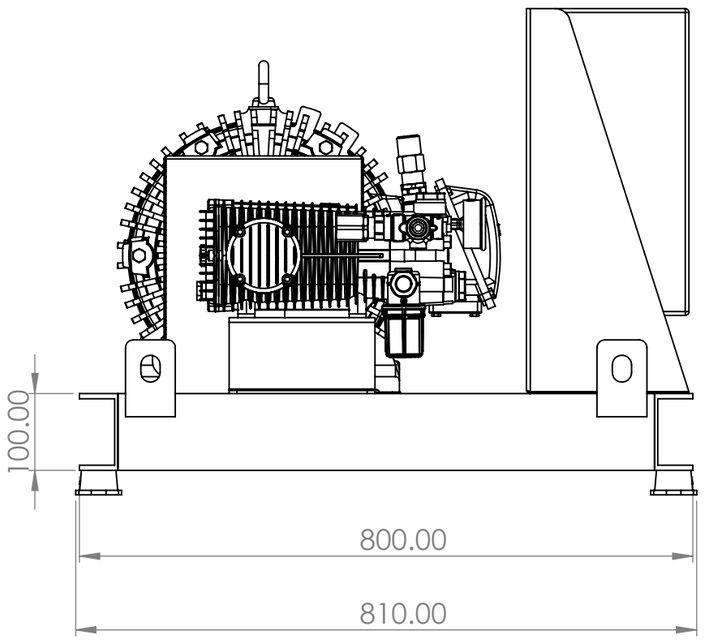

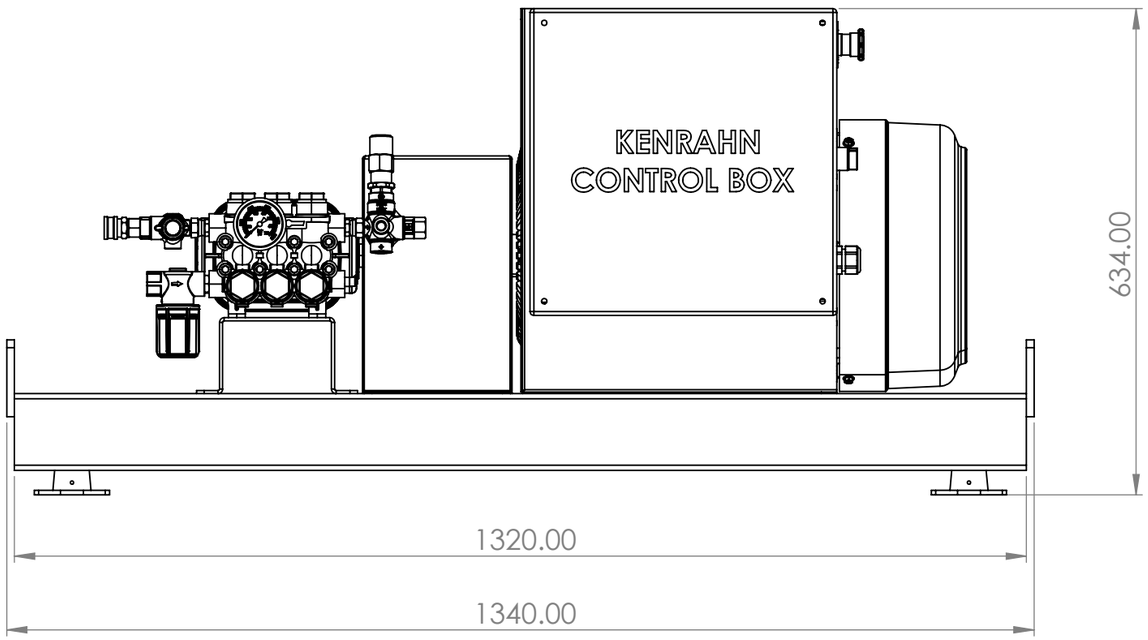

UNLESS OTHERWISE SPECIFIED: DIMENSIONS ARE IN MILLIMETERS SURFACE FINISH: TOLERANCES: LINEAR: ANGULAR:	FINISH:				DEBURR AND BREAK SHARP EDGES	B.A.R. Group P/L
	NAME	SIGNATURE	DATE		REVISIONS	PART NO. / PRODUCT
DRAWN	Kishwar A		24/02/23			104 HD502622-B G.A dwg
CHK'D	Dominic R					
APPV'D	Daryl B					
MFG						
Q.A				MATERIAL:		DESCRIPTION
				Mild Steel		Overall Dimensions
						A3
				WEIGHT:		SCALE:1:20
						SHEET 1 OF 1