# TTL 1320 - 1520 - 1820 - 2120 - 2420

from 07/15
from serial number 15070568

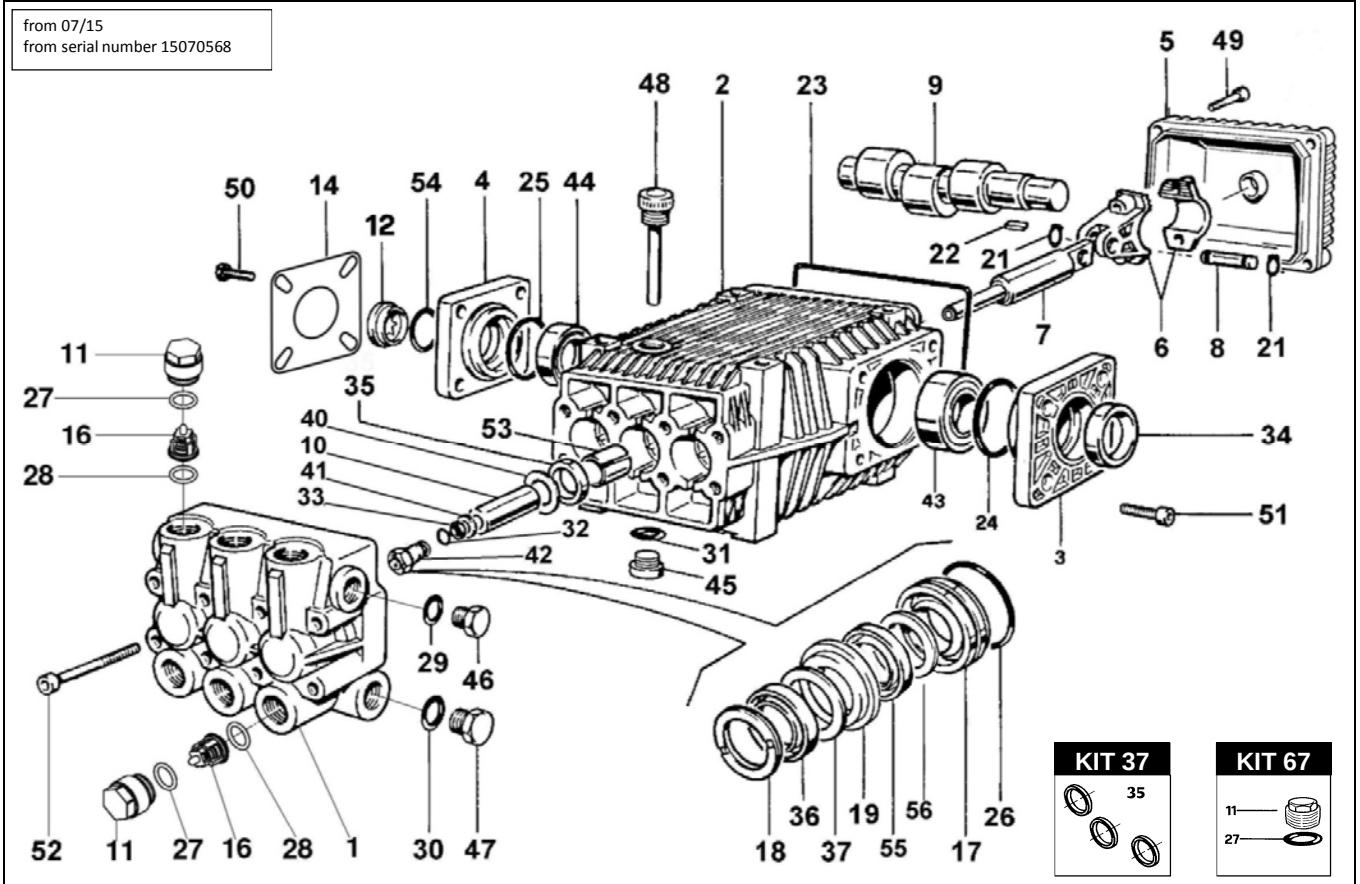


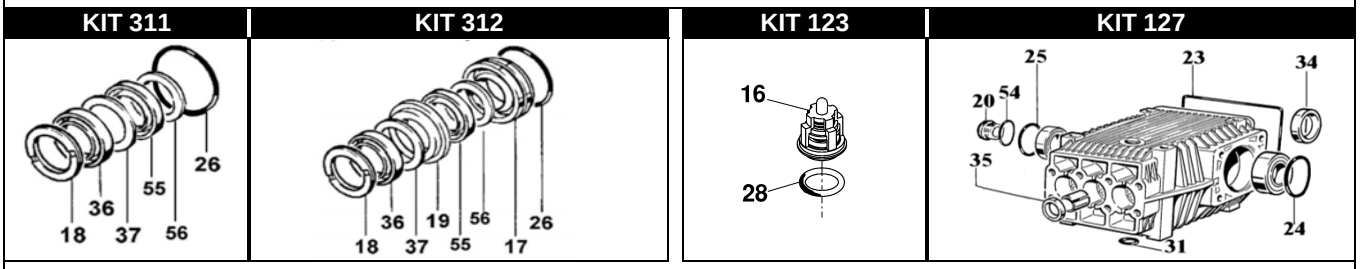


| POS. | CODICE PART NO. *RÉF.* | DENOMINAZIONE - DESCRIPTION - *DESCRIPTION* | Q.TY |
|---|---|---|---|
| 1 | 060159282 | PUMP HEAD D.20 | 1 |
| 2 | 060001092 | CRANKCASE | 1 |
| 3 | 060016092 | BEARING COVER DIA.72 MM | 1 |
| 4 | 060017092 | BEARING COVER DIA.80 MM | 1 |
| 5 | 060003092 | CRANKCASE COVER | 1 |
| 6 | 069800972 | CONNECTING ROD | 3 |
| 6 | 862796002 | CONNECTING ROD BOLT | 6 |
| 7 | 060071512 | PLUNGER ROD | 3 |
| 8 | 060007492 | PISTON PIN DIA.15 MM | 3 |
| 9/1 | 060106262 | CRANKSHAFT TTL 1320 | 1 |
| 9/2 | 060107262 | CRANKSHAFT TTL 1520 | 1 |
| 9/3 | 060163262 | CRANKSHAFT TTL 1820 | 1 |
| 9/4 | 060164262 | CRANKSHAFT TTL 2120 | 1 |
| 9/5 | 060165262 | CRANKSHAFT TTL 2420 | 1 |
| 10 | 060009182 | CERAMIC PISTON DIA.20 MM | 3 |
| 11-kit 67 | 070040282 | EX. DEEP SEALING VALVE CAP M27x1,5 | 6 |
| 12-kit 127 | 060019322 | OIL SIGHT GLASS | 1 |
| 14 | 060123612 | SHEET FOR OIL SIGHT LOCKING | 1 |
| 16-kit 123 | 069846973 | CHECK VALVES | 6 |
| 17-kit 312 | 060218532 | BACK GLAND DIA.20 MM | 3 |
| 18-kit 311-312 | 802065302 | THRUST RING DIA.20 | 3 |
| 19-kit 312 | 060217532 | FRONT GLAND | 3 |
| 21 | 801099002 | CIRCLIP DIA.15 | 6 |
| 22 | 806534002 | TAB 8X7X35 | 1 |
| 23-kit 127 | 803210902 | O-RING DIA.2,62X152 | 1 |
| 24-kit 127 | 803210552 | O-RING DIA.2,62X67,95 | 1 |
| 25-kit 127 | 803210642 | O-RING DIA.2,62X75,87 | 1 |
| 26-kit 311-312 | 803080102 | O-RING DIA.1,78X34,65 | 3 |
| 27-kit 67 | 803182802 | O-RING DIA.2,62X17,13 | 6 |
| 28-kit 123 | 803182802 | O-RING DIA.2,62X17,13 | 6 |
| 29 | 824109002 | GASKET DIA.17X22X1 | 1 |
| 30 | 824180002 | GASKET DIA.27X36X1 | 1 |
| 31-kit 127 | 803204802 | O-RING DIA.2,62X23,81 | 1 |
| 32 | 803058002 | O-RING DIA.1,78X10,82 | 3 |

| POS. | CODICE PART NO. *RÉF.* | DENOMINAZIONE - DESCRIPTION - *DESCRIPTION* | Q.TY |
|---|---|---|---|
| 33 | 803902002 | ANTI-EXTRUSION RING | 3 |
| 34-kit 127 | 802143002 | OIL SEAL | 1 |
| 35-kit 37-127 | 802090002 | OIL SEAL DIA.17 | 3 |
| 36-kit 311-312 | 802065102 | SUPER "U" PACKING DIA.20X30 | 3 |
| 37-kit 311-312 | 060086322 | ANTIEXTRUSION RING | 3 |
| 40 | 060018682 | WASHER DIA.14X38X0,5 | 3 |
| 41 | 843646002 | WASHER | 3 |
| 42 | 060072002 | PISTON BOLT | 3 |
| 43 | 812848002 | ROLLER BEARING DIA.35X72X17 | 1 |
| 44 | 812867002 | BALL BEARING | 1 |
| 45 | 852687002 | CAP G 3/4 | 1 |
| 46 | 852579532 | PLUG G 3/8 BRASS (OPTIONAL) | 1 |
| 47 | 852693532 | CAP G3/4 BRASS (OPTIONAL) | 1 |
| 48 | 060020322 | OIL FILLER PLUG WITH DIP STICK | 1 |
| 49 | 862108002 | BOLT | 4 |
| 50 | 863265002 | BOLT | 4 |
| 51 | 862562002 | BOLT | 4 |
| 52 | 862945002 | BOLT | 8 |
| 53 | 804300002 | SELF-LUBRIFICATING BUSHING | 3 |
| 54-kit 127 | 803262002 | O-RING DIA.3,53X41,28 | 1 |
| 55-kit 311-312 | 802301102 | "U" PACKING DIA. 20X28 | 3 |
| 56-kit 311-312 | 802301202 | SCRAPER RING DIA.20 | 3 |

| REPAIR KIT | ITEM NO,s | INCLUDED | PCS. |
|---|---|---|---|
| kit 37 | 069814973 | SPARE PARTS KIT | 3 |
| kit 67 | 049839973 | SPARE PARTS KIT | 12 |
| kit 311 | 069964973 | SPARE PARTS KIT | 18 |
| kit 312 | 069965973 | SPARE PARTS KIT | 24 |
| kit 123 | 069867973 | SPARE PARTS KIT | 12 |
| kit 127 | 069872973 | SPARE PARTS KIT | 10 |
| | | HOT WATER CONVERSION KIT (85°C-185°F) | |
| kit 200 | 069884973 | H.W. PACKING SEALING KIT | 24 |
| kit 249 | 069956973 | H.W. VALVE KIT | 18 |



BERTOLINI pumps