UDOR® WATER POWER

NEW «NK» PUMP SERIES

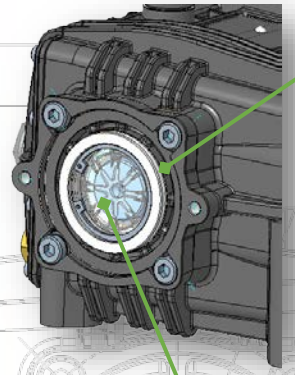

Bearing-Flange with double O-ring to avoid oil-leaking

Vented cap moved towards the back of crankcase to avoid oil splashes and potential leaks

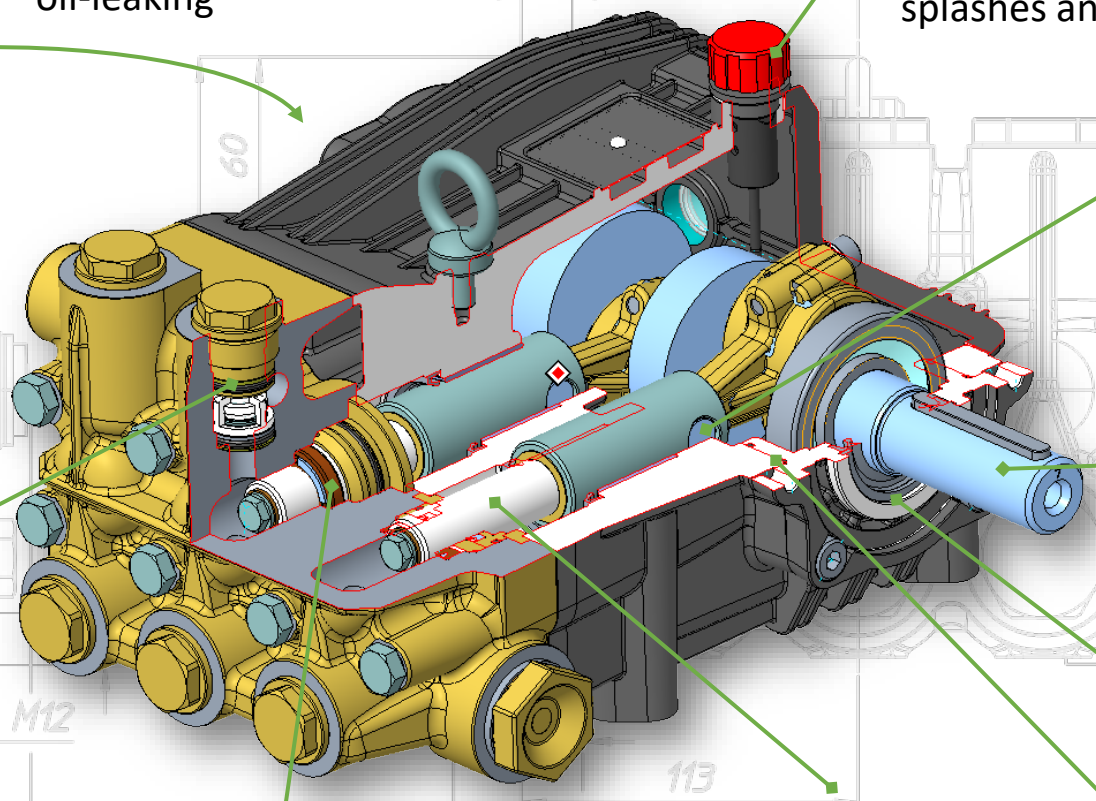

Larger wrist pin on connecting rods to allow higher load

Oil sight-glass on the bearing flange to better check oil level

Crankshaft end with 30mm diameter (instead of 35mm of the NX) to better suit industry standard

Valve plugs with O-ring on lower, to seal water pressure before the thread on higher pressure models

Shaft seal fixed with Seeger ring to avoid expulsion

Ceramic plungers with higher thickness to better absorb thermal shocks

Bearing-Flange with double O-ring to avoid oil-leaking

U-shaped water seals instead of V-shaped

MADE IN ITALY