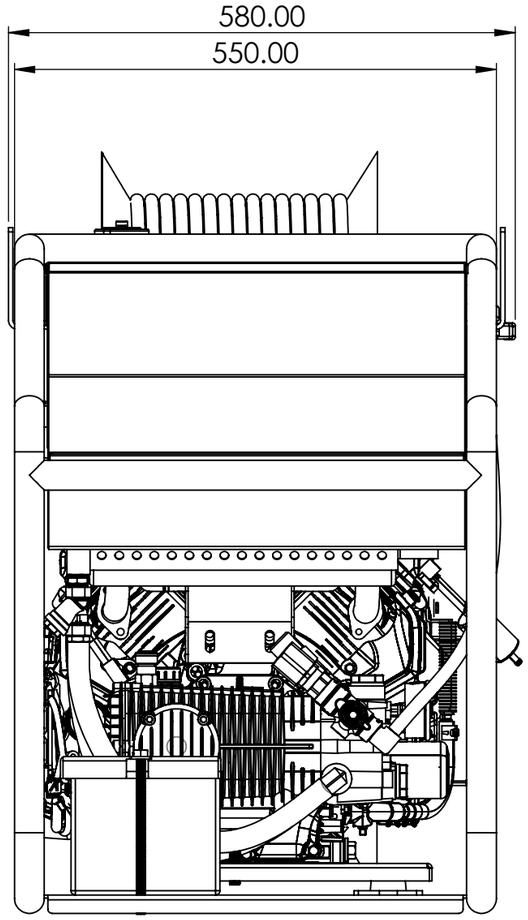

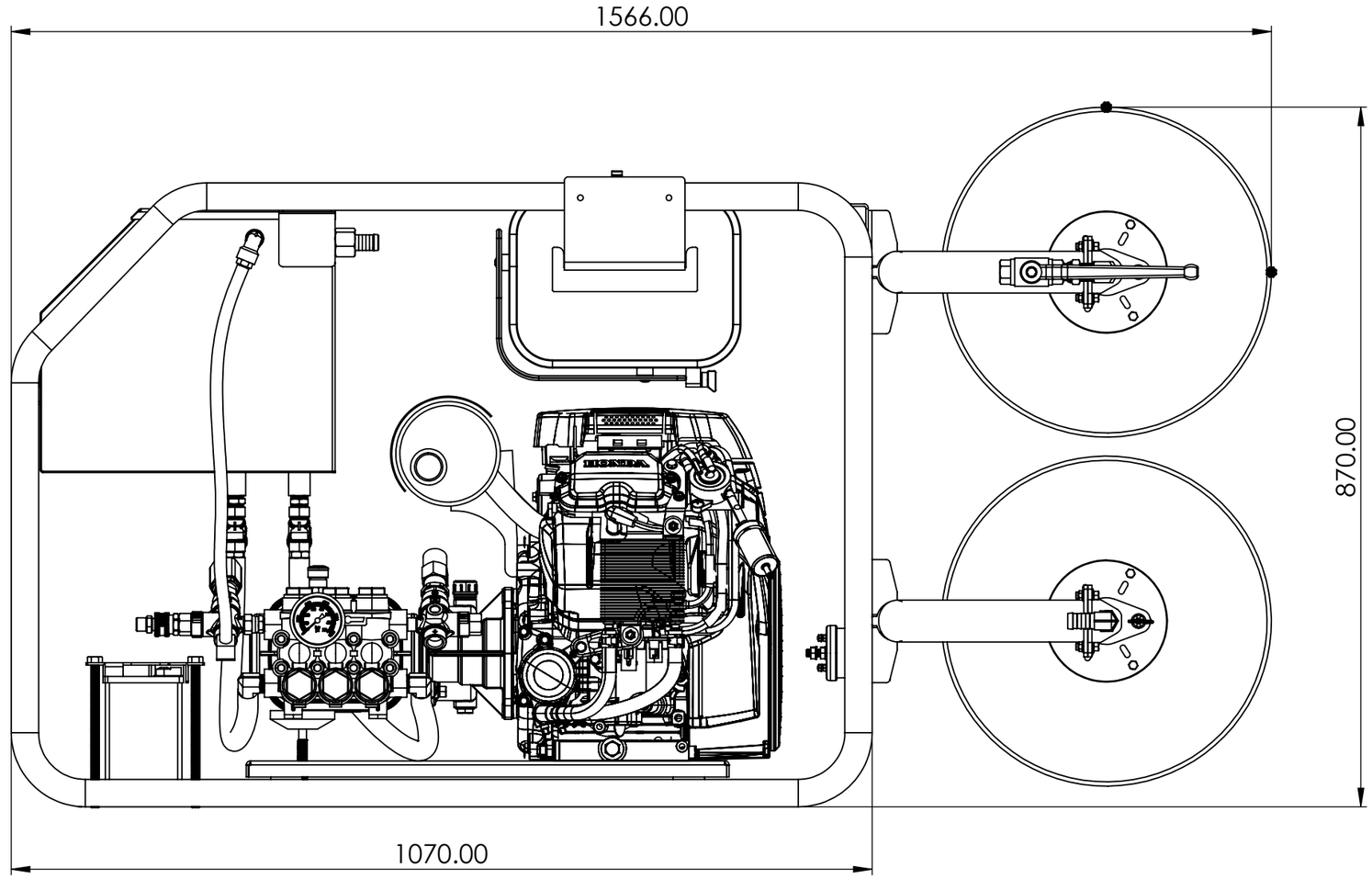

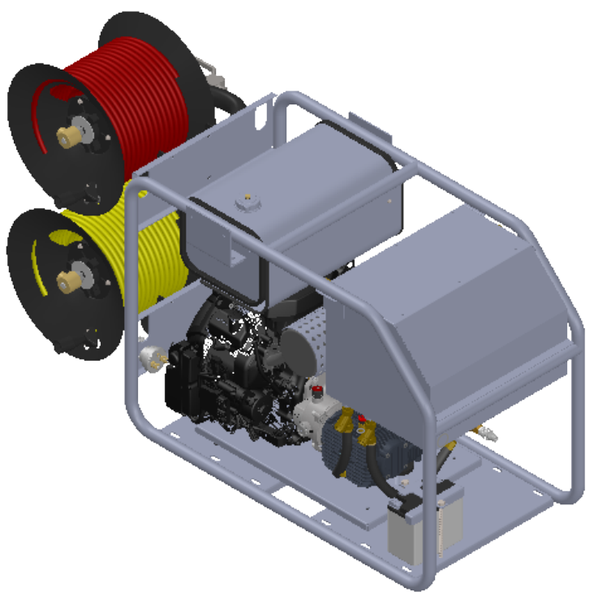

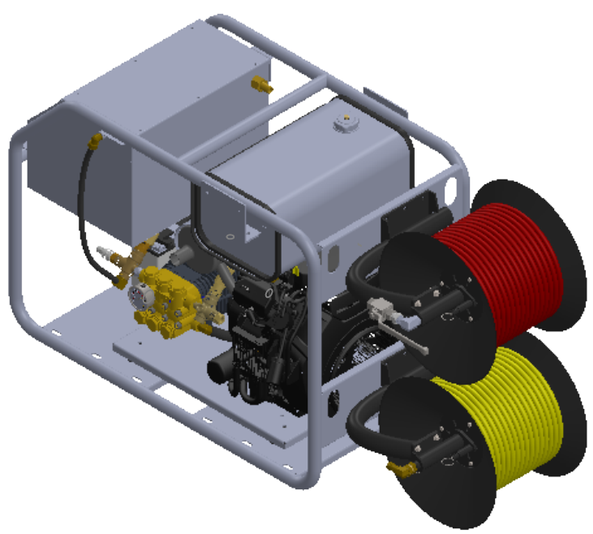

UNLESS OTHERWISE SPECIFIED: DIMENSIONS ARE IN MILLIMETERS SURFACE FINISH: TOLERANCES: LINEAR: ANGULAR:		FINISH:			DEBURR AND BREAK SHARP EDGES	B.A.R. Group P/L
	NAME	SIGNATURE	DATE		REVISIONS	PART NO. / PRODUCT
DRAWN	Ryan B		15/04/24			120 BAR5030CJ-HEVT GA Drawing
CHK'D						
APPV'D						
MFG						
Q.A				MATERIAL: N/A		DESCRIPTION 5000psi @ 26lpm Vanpack — A3
				WEIGHT:		SCALE:1:7 — SHEET 1 OF 1