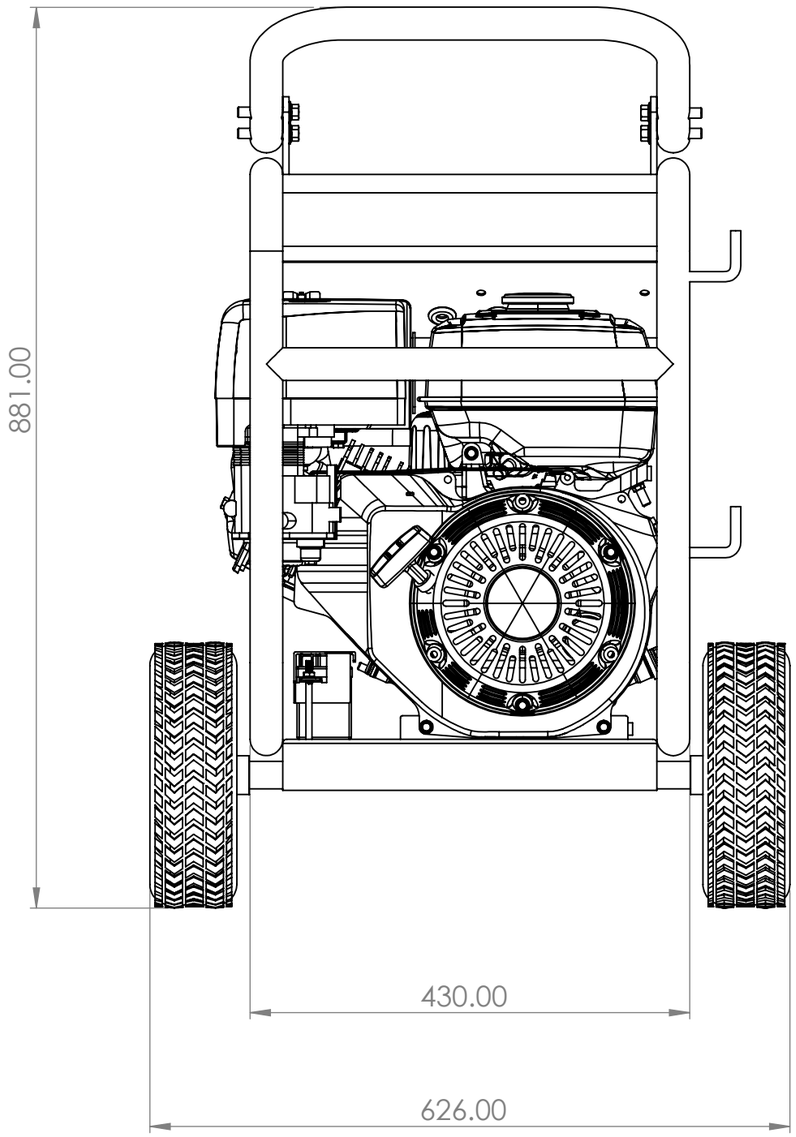

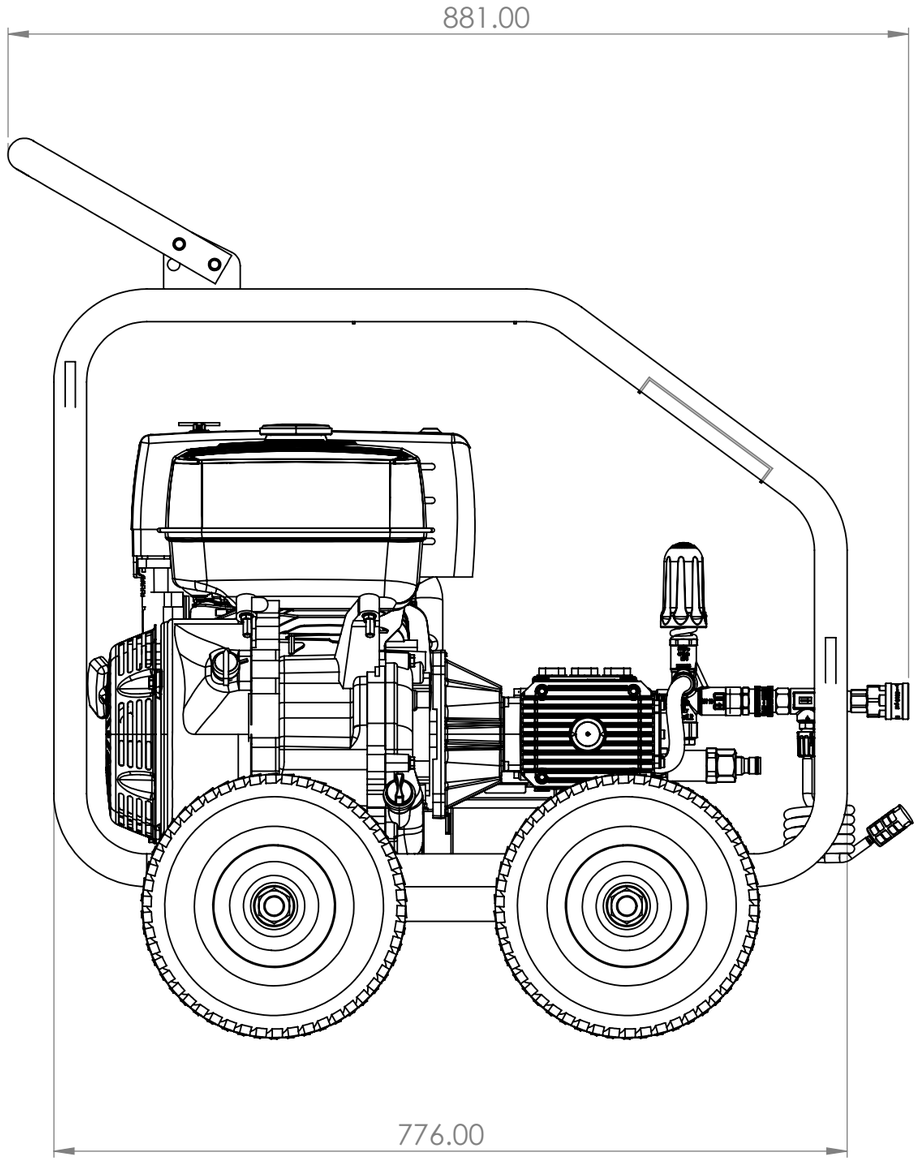

UNLESS OTHERWISE SPECIFIED:
DIMENSIONS ARE IN MILLIMETERS
SURFACE FINISH:
TOLERANCES:
LINEAR:
ANGULAR:

FINISH:

DEBURR AND BREAK SHARP EDGES

B.A.R. Group P/L

	NAME	SIGNATURE	DATE		REVISIONS
DRAWN	Kishwar A		02/06/22		
CHK'D	Dominic R				
APPV'D	Daryl B				
MFG					
Q.A					

MATERIAL:

WEIGHT:

PART NO. / PRODUCT

120 BAR4013C-HEJ
G.A. dwg

DESCRIPTION

Overall Dimensions

A3

SCALE:1:10

SHEET 1 OF 1