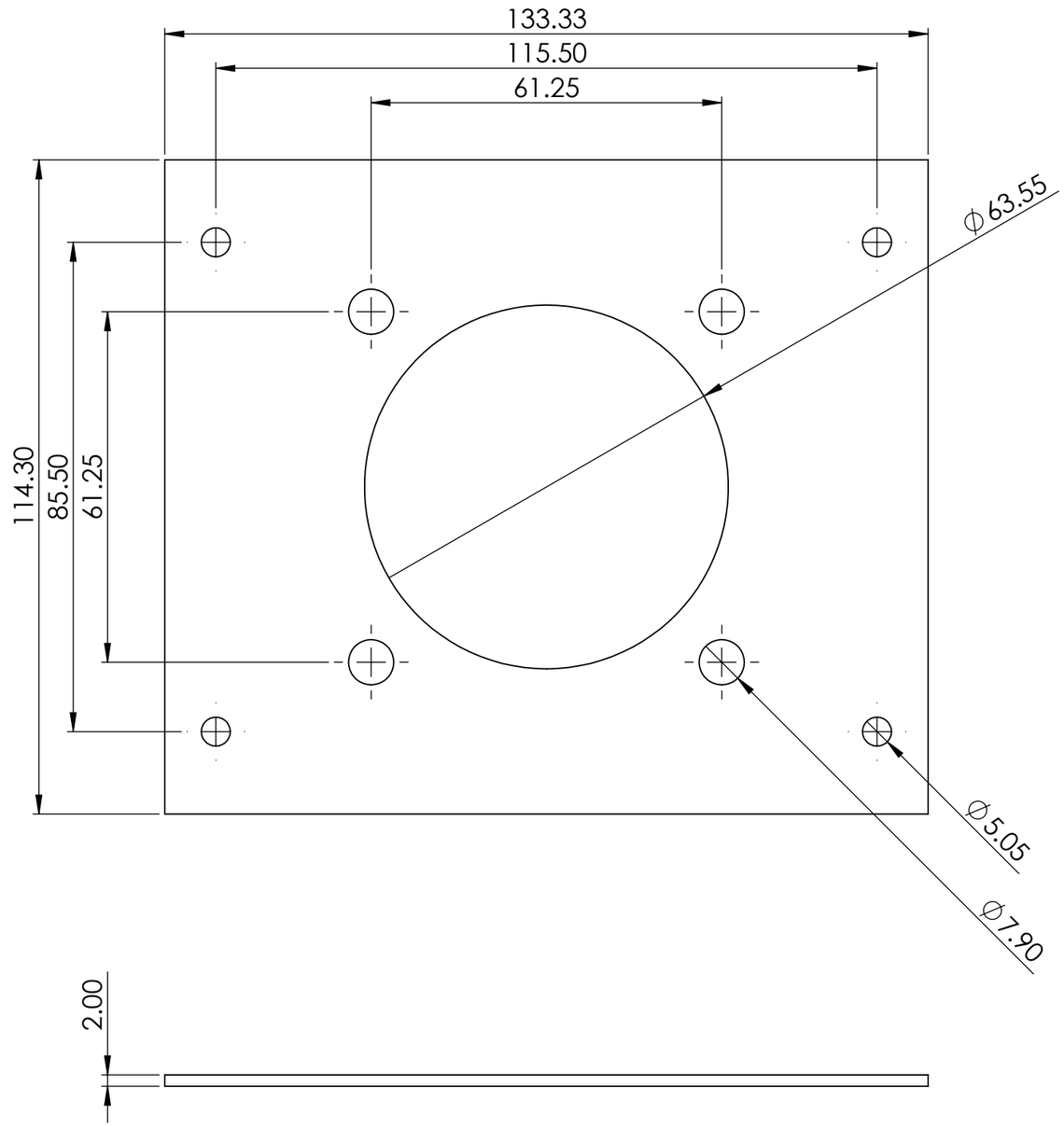

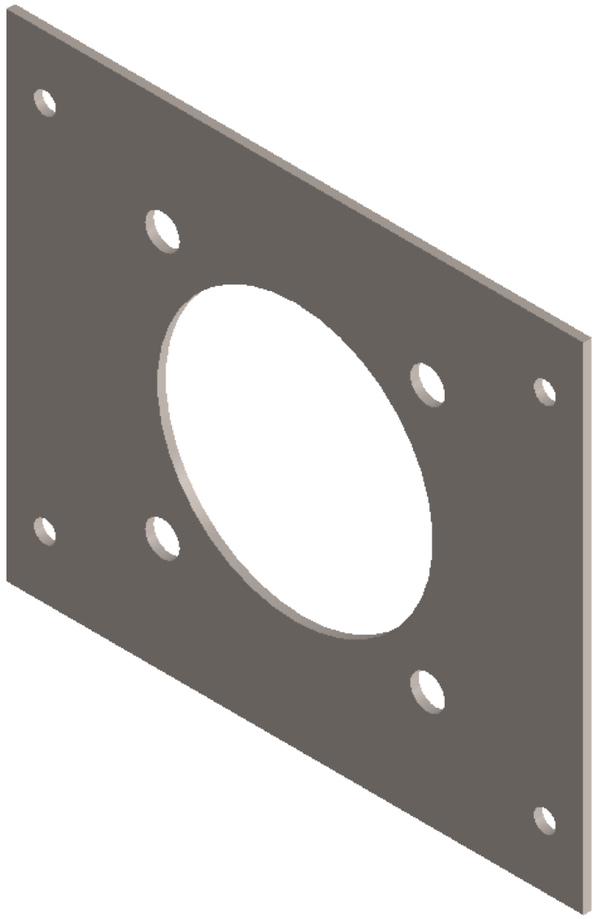

UNLESS OTHERWISE SPECIFIED: DIMENSIONS ARE IN MILLIMETERS SURFACE FINISH: TOLERANCES: LINEAR: ANGULAR:	FINISH:					DEBURR AND BREAK SHARP EDGES	B.A.R. Group P/L
	NAME	SIGNATURE	DATE		REVISIONS		PART NO. / PRODUCT
DRAWN	Ryan B		19/04/24				115 760000099 G.A. Drawing
CHK'D							
APPV'D							
MFG							
Q.A				MATERIAL:			DESCRIPTION Comet Clutch Plate S/S — A3
				WEIGHT:			SCALE:1:1 — SHEET 1 OF 1