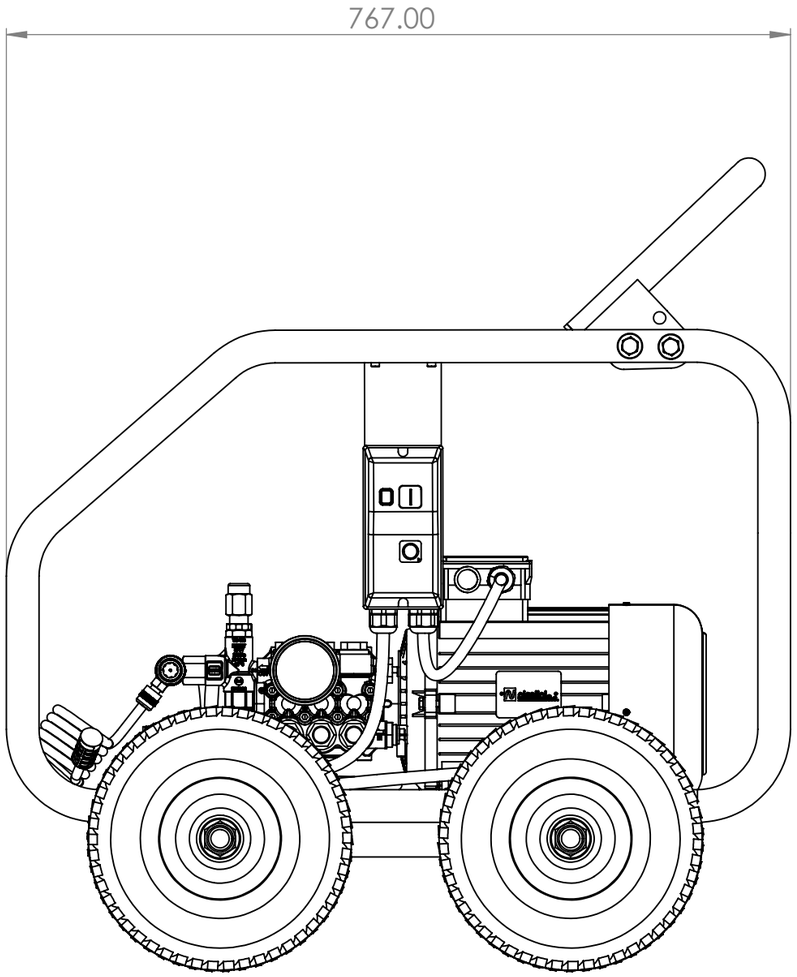

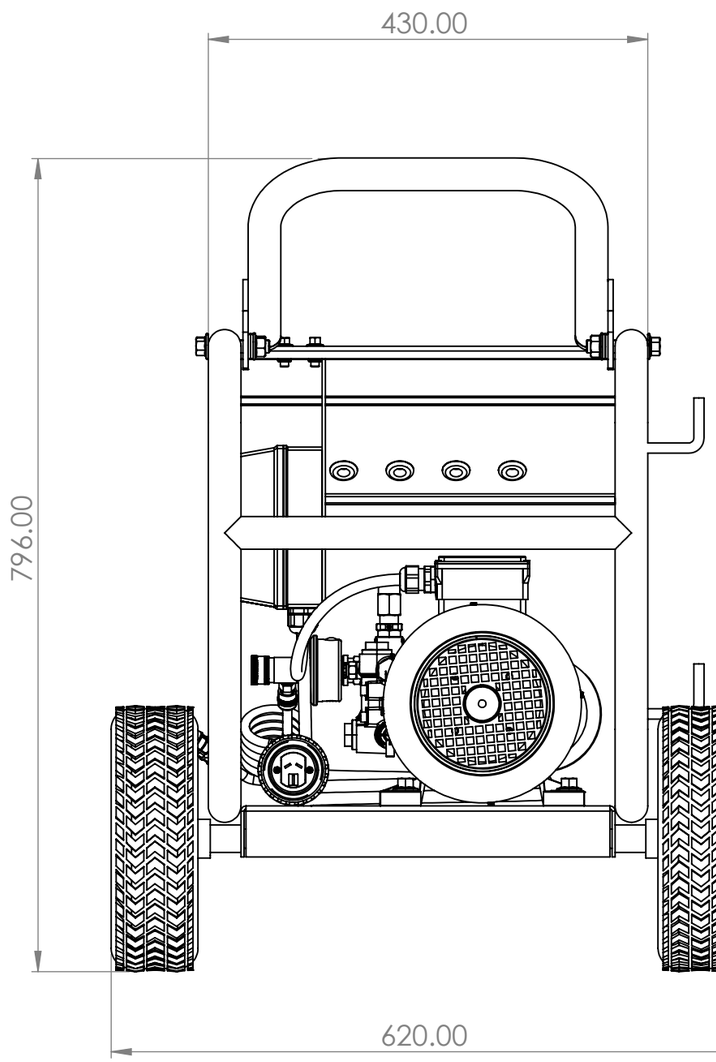

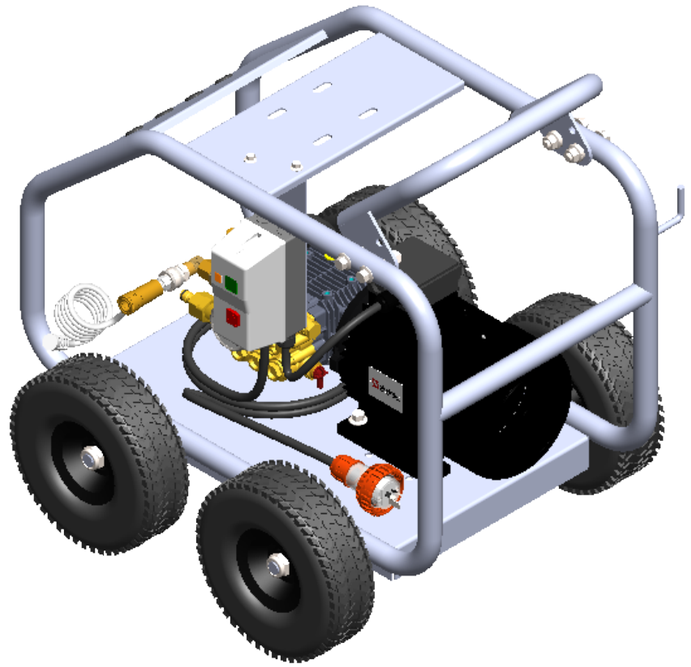

UNLESS OTHERWISE SPECIFIED: DIMENSIONS ARE IN MILLIMETERS SURFACE FINISH: TOLERANCES: LINEAR: ANGULAR:	FINISH:				DEBURR AND BREAK SHARP EDGES	B.A.R. Group P/L
	NAME	SIGNATURE	DATE		REVISIONS	PART NO. / PRODUCT
DRAWN	Kishwar A		10/06/22			104 HD151122 G.A. dwg
CHK'D	Dominic R					
APPV'D	Daryl B					
MFG						
Q.A				MATERIAL:		DESCRIPTION: Overall Dimensions — A3
				WEIGHT:		SCALE:1:10 — SHEET 1 OF 1